# Miscelatore lavello a parete TR_TR000400

cisal

## TR 00040 (TR 00044)

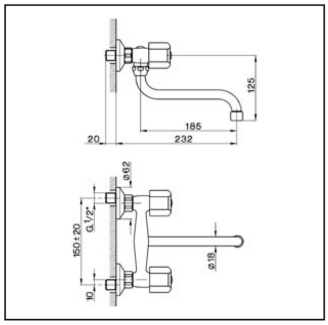


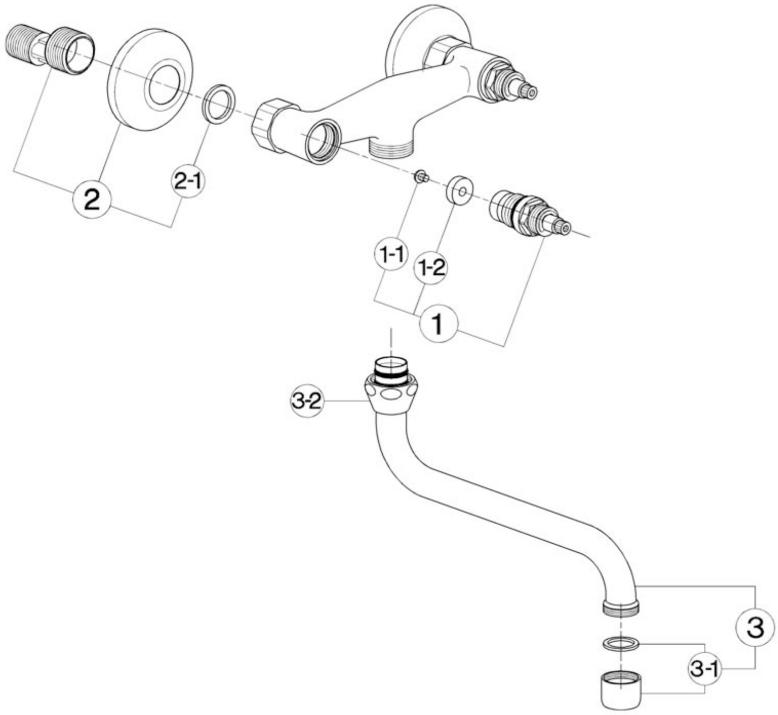


- **Gruppo lavello**
- ***Sink mixer***
- **Spültisch-Wandbatterie**
- ***Mélangeur évier mural***

| bar | PORTATA BOCCA DI EROGAZIONE * *SPOUT FLOW RATE* DURCHFLUSS WANNENEINLAUF *DÉBIT BEC DÉVERSEUR* l/min. |
|---|---|
| 0.1 | 20.5 |
| 0.2 | 27.5 |
| 0.3 | 36 |
| 0.4 | 41.5 |
| 0.5 | 46.5 |
| 1 | 66 |

* con rompigetto
*with antisplash*
mit Strahlregler
*avec brise-jet*

| NR. | DESCRIZIONE *DESCRIPTION* BESCHREIBUNG *DÉSCRIPTION* | N. CODICE *CODE NO.* WERKSNR. *NR. CODE* |
|---|---|---|
| 1 | Vitone 1/2" "TR"<br>*Headvalve 1/2" "TR"*<br>Oberteil 1/2" "TR"<br>*Tête 1/2" "TR"* | ZZ 92869 0 |
| 1-1 | Vite M.4x4,5 tb. Ø8 t.cr.<br>*Screw M.4x4,5*<br>Schraube M.4x4,5<br>*Vis M.4x4,5* | ZZ 92625 0 |
| 1-2 | Guarnizione NBR 90 SH. 16,9x5,5x5<br>*Gasket NBR 90 SH. 16,9x5,5x5*<br>Dichtung NBR 90 SH. 16,9x5,5x5<br>*Joint NBR 90 SH. 16,9x5,5x5* | ZZ 92699 0 |
| 2 | Eccentrico con rosone<br>*Excentric connection with escutcheon*<br>S - Anschluss m.Rosette<br>*Excentrique + rosace* | ZZ 92730 0 |
| 2-1 | Guarnizione NBR 90 SH. 24x16x2,7<br>*Gasket NBR 90 SH. 24x16x2,7*<br>Dichtung NBR 90 SH. 24x16x2,7<br>*Joint NBR 90 SH. 24x16x2,7* | ZZ 92689 0 |
| 3 | Canna a S Ø18 interasse 185<br>*Swinging spout 185 Ø18*<br>Auslauf-Rohr-S-185 Ø18<br>*Bec orientable 185 Ø18* | ZZ 92735 0 |

| NR. | DESCRIZIONE *DESCRIPTION* BESCHREIBUNG *DÉSCRIPTION* | N. CODICE *CODE NO.* WERKSNR. *NR. CODE* |
|---|---|---|
| 3-1 | Rompigetto M.22x1<br>*Antisplash M.22x1*<br>Strahlregler M.22x1<br>*Brise-jet M.22x1* | ZZ 92771 0 |
| 3-2 | Calotta 3/4" es.29 Ø19,5<br>*Nut 3/4" Ø19,5*<br>Mutter 3/4" Ø19,5<br>*Ecrou 3/4" Ø19,5* | ZZ 92615 0 |

| NR. | DESCRIZIONE *DESCRIPTION* BESCHREIBUNG *DÉSCRIPTION* | N. CODICE *CODE NO.* WERKSNR. *NR. CODE* |
|---|---|---|



© 2021 Cisal. Via Pietro Durio 160 - 28010 - Alzo (NO) - Italia
Mail: cisal@cisal.it, Telefono: (+39) 0322 918111, P.Iva IT02422810032.