Miscelatore monocomando lavello EnergySave KITCHEN_LN000535

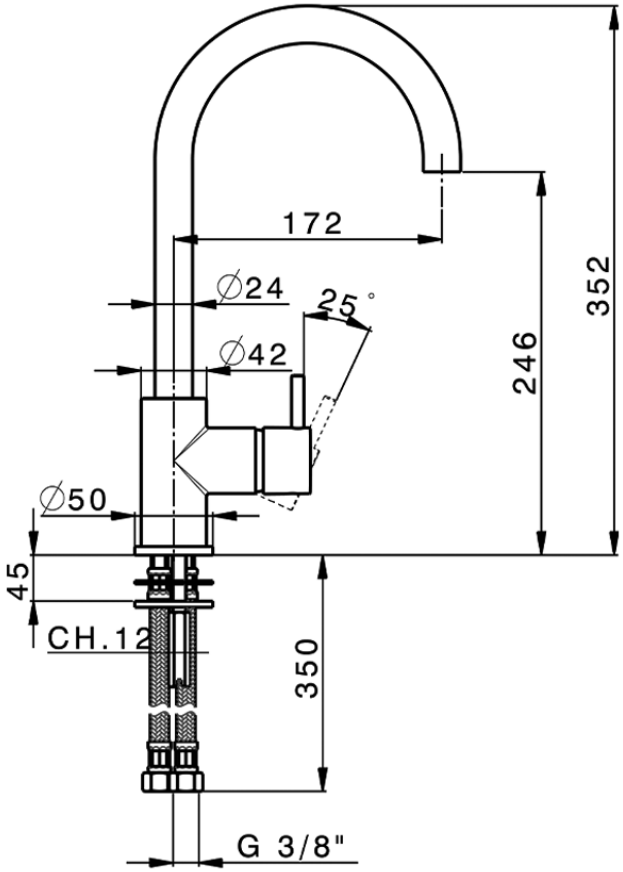

LN000535

https://www.cisal.it/miscelatore-monocomando-lavello-energysave-kitchen-ln000535

2026-11-25

© 2021 Cisal. Via Pietro Durio 160 - 28010 - Alzo (NO) - Italia
Mail: cisal@cisal.it, Telefono: (+39) 0322 918111, P.Iva IT02422810032.