Cisal
TEL. (+39) 0322 918111
MAIL. cisal@cisal.it

Miscelatore monocomando lavabo large NUANCE X32_X1000504

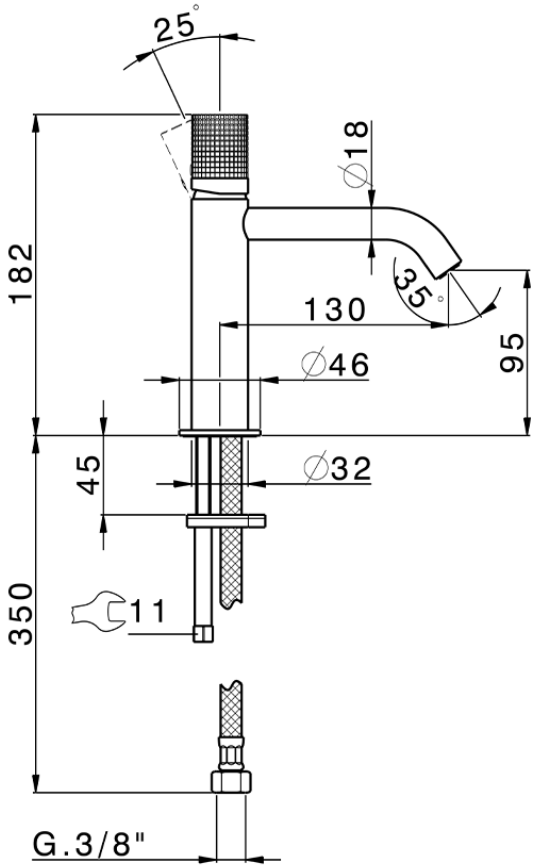

X1000504 https://www.cisal.it/miscelatore-monocomando-lavabo-large-nuance-x32-x1000504

2026-09-17

© 2021 Cisal. Via Pietro Durio 160 - 28010 - Alzo (NO) - Italia
Mail: cisal@cisal.it, Telefono: (+39) 0322 918111, P.Iva IT02422810032.