Rubinetto d'arresto incasso ARCANA CERAMIC_AC000310

cisal

AC 00031

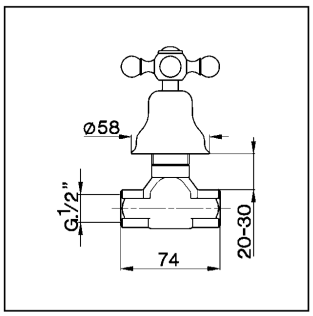

- **Rubinetto incasso**
- ***Concealed valve***
- **UP-Ventil**
- ***Robinet à encastrer***

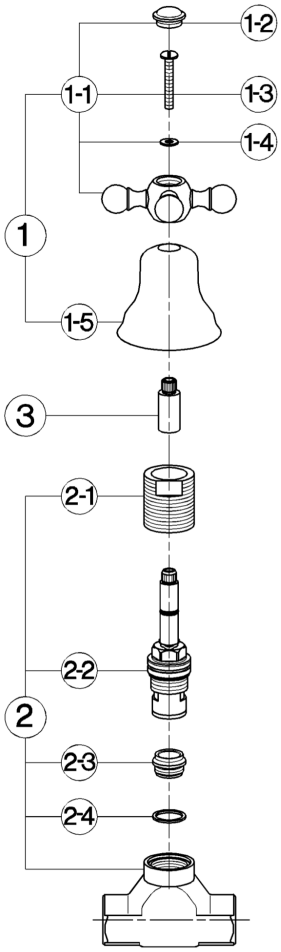

bar	PORTATA * *FLOW RATE* DURCHFLUSS *DÉBIT* l/min.
0.1	6.5
0.3	9
0.5	11.5
1	13.5
2	15
3	21.5

* senza resistenza silenziosa (uscita libera)
without hydraulic resistance
ohne Widerstand
sans résistance hydraulique

NR.	DESCRIZIONE *DESCRIPTION* BESCHREIBUNG *DÉSCRIPTION*	N. CODICE *CODE NO.* WERKSNR. *NR. CODE*
1	Maniglia con cappuccio "AR" *Handle with escutcheon "AR"* Griff "AR" mit Abdeckkappe *Croisillon + rosace "AR"*	ZZ 92980 0
1-1	Maniglia "AR" con vite e placchetta *Handle with screw and plate "AR"* Griff "AR" mit Schraube und Abdeckkappe *Croisillon avec vis et plaquette "AR"*	ZZ 92981 0
1-2	Placchetta a vite maniglia "AR" *Cap for handle "AR"* Abdeckkappe "AR" Griff *Plaquette cache - vis crois. "AR"*	ZZ 92617 0
1-3	Vite M.4,5x28,5 tc. Ø8x2 *Screw M.4,5x28,5* Schraube M.4,5x28,5 *Vis M.4,5x28,5*	ZZ 92607 0
1-4	Rondella ottone 10x4,5x0,8 *Ring in brass 10x4,5x0,8* Unterlegscheibe 10x4,5x0,8 *Joint laiton 10x4,5x0,8*	ZZ 92663 0
1-5	Cappuccio a campana "AR" *Escutcheon "AR"* Abdeckkappe "AR" *Rosace "AR"*	ZZ 92598 0

NR.	DESCRIZIONE *DESCRIPTION* BESCHREIBUNG *DÉSCRIPTION*	N. CODICE *CODE NO.* WERKSNR. *NR. CODE*
2	Rubinetto incasso 1/2" *Concealed stop cock 1/2"* Unterputventil 1/2" *Robinet à encastrer 1/2"*	ZZ 92982 0
2	Rubinetto incasso 3/4" *Concealed stop cock 3/4"* Unterputventil 3/4" *Robinet à encastrer 3/4"*	ZZ 92983 0
2-1	Riduzione capp. bordo vasca e incasso *Reduction for bath escutcheon* Reduzierstueck *Reduction rosace*	ZZ 92682 0
2-2	Vitone ceramico DX per batterie "AC" *Ceramic headvalve 1/2" right "AC"-long* Keramikoberteil 1/2"-rechts-"AC"-lang *Tête céramique 1/2" droite "AC" - longue*	ZZ 92859 0
2-3	Sede rubinetto incasso 1/2" *Seat 1/2"* Sitz 1/2" *Siège 1/2"*	ZZ 92658 0
2-4	Guarnizione rame 18,5x16,1x1 *Gasket copper 18,5x16,1x1* Kupferdichtung 18,5x16,1x1 *Joint cuivre 18,5x16,1x1*	ZZ 92656 0

NR.	DESCRIZIONE *DESCRIPTION* BESCHREIBUNG *DÉSCRIPTION*	N. CODICE *CODE NO.* WERKSNR. *NR. CODE*
3	Prolunga asta vitone *Extension for headvalve* Verlaengerung *Rallonge*	ZZ 92606 0

AC.4

AC000310 https://www.cisal.it/rubinetto-darresto-incasso-arcana-ceramic-ac000310

2026-09-15

© 2021 Cisal. Via Pietro Durio 160 - 28010 - Alzo (NO) - Italia
Mail: cisal@cisal.it, Telefono: (+39) 0322 918111, P.Iva IT02422810032.