Miscelatore monocomando bidet EnergySave NUOVA LESS_LN002565

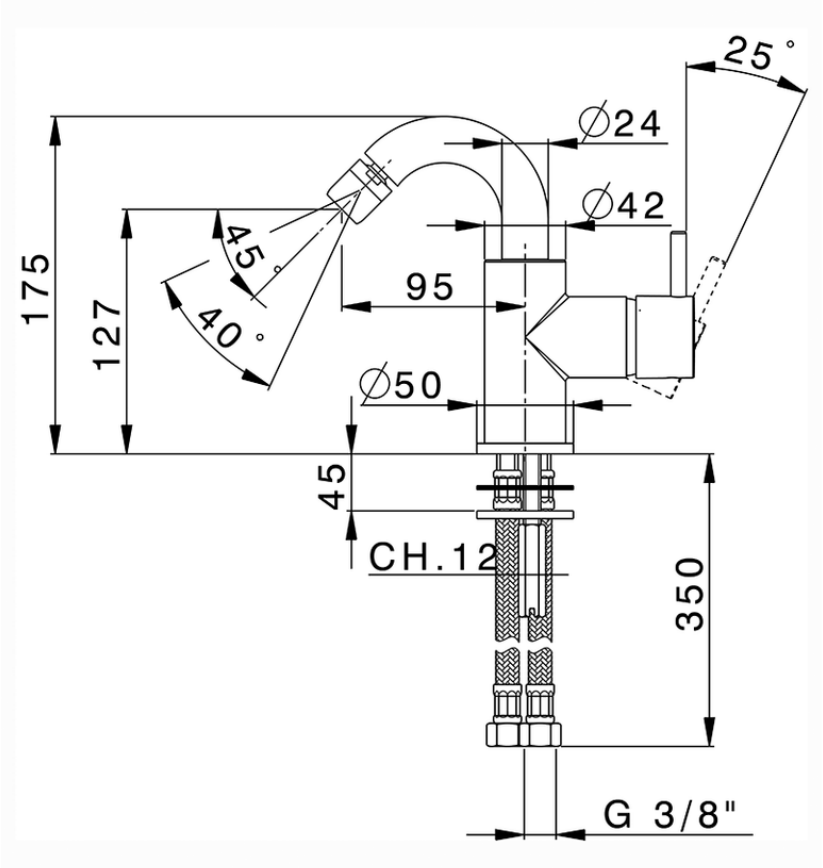

LN002565 https://www.cisal.it/miscelatore-monocomando-bidet-energysave-nuova-less-ln002565

2026-05-20