Parte esterna lavabo a parete SMOOTH X32_X4013511

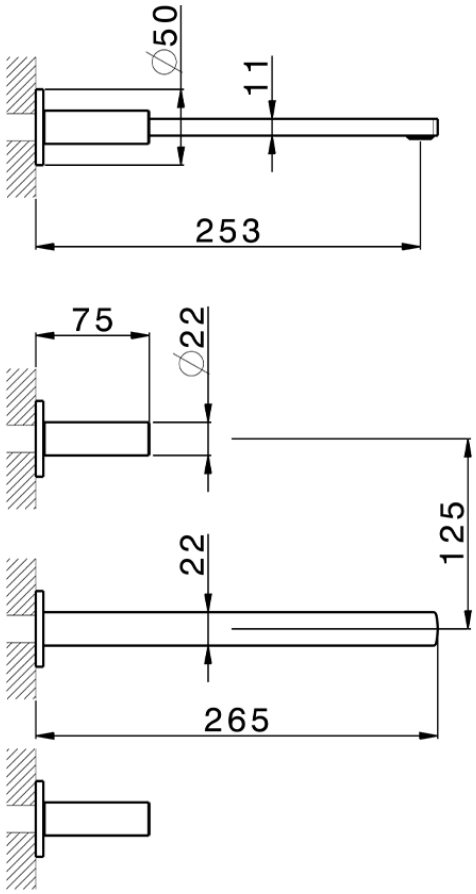

X4013511

https://www.cisal.it/parte-esterna-lavabo-a-parete-smooth-x32-x4013511

Cisal
TEL. (+39) 0322 918111
MAIL. cisal@cisal.it

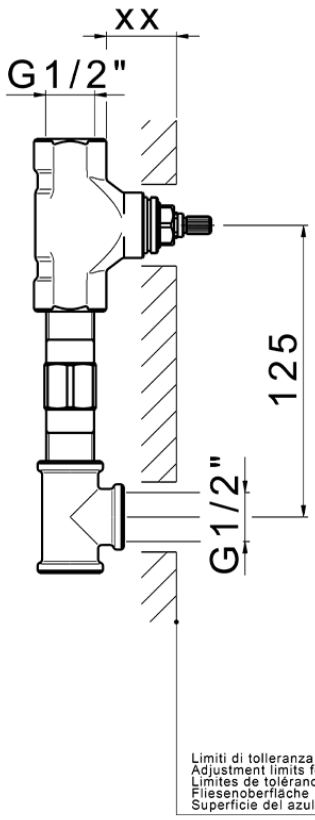

Serie's code	Size XX
CX 1351	20-35
CF 1351	20-35
CX 0331	20-35
CF 0331	20-35
CX 0200	20-35
CF 0200	20-35
BA 1351	20-35
GS 1351	20-35
GL 1351	20-35
MN 1351	20-35
LN 1351	20-35
LV 1351	33-48
LY 1351	33-48
CU 1351	33-48
SM 1351	30-45
AA 1351	10-30
AC 1351	10-30
AR 1351	15-25
PZ 1351	10-30
RG 1351	10-30
TS 1351	10-30
VT 1351	10-30
CS 1351	10-30
WA 1351	45-68
X1 1351	33-45
X2 1351	33-45
X3 1351	33-45
X4 1351	33-45
X5 1351	33-45
RI 1351	20-35
RM 1351	20-35

Limiti di tolleranza superficie piastrelle
Adjustment limits for finished tile surface
Limites de tolérance surface carrelage
Fliesenoberfläche
Superficie del azulejo

ZA033510

https://www.cisal.it/parte-incasso-lavabo-a-parete-incasso-za033510

2026-11-24

© 2021 Cisal. Via Pietro Durio 160 - 28010 - Alzo (NO) - Italia
Mail: cisal@cisal.it, Telefono: (+39) 0322 918111, P.Iva IT02422810032.