Cisal
TEL. (+39) 0322 918111
MAIL. cisal@cisal.it

Miscelatore lavabo GRACE_MN000510

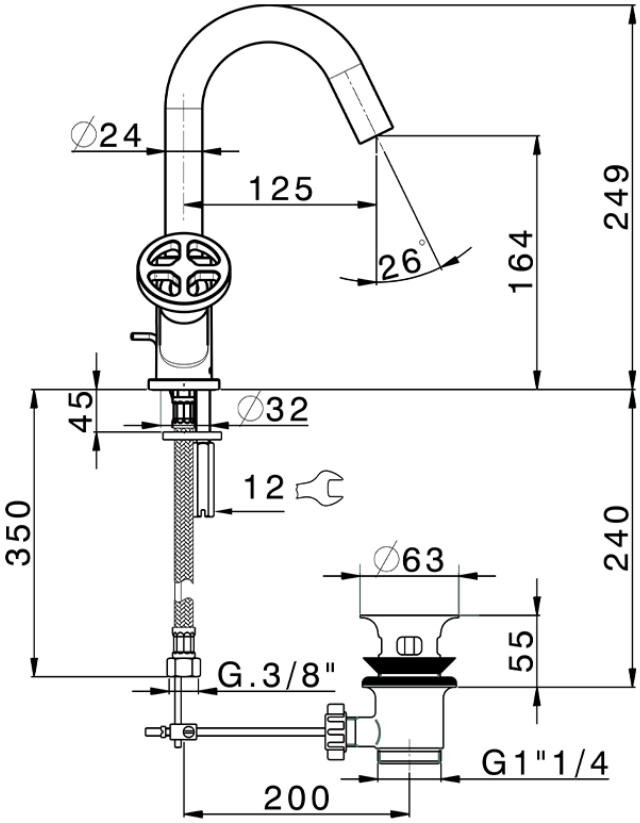

MN000510

https://www.cisal.it/miscelatore-lavabo-grace-mn000510

2026-09-17

© 2021 Cisal. Via Pietro Durio 160 - 28010 - Alzo (NO) - Italia
Mail: cisal@cisal.it, Telefono: (+39) 0322 918111, P.Iva IT02422810032.