Miscelatore lavello KITCHEN_BA000530

cisal

BA 00052 (BA 00053)

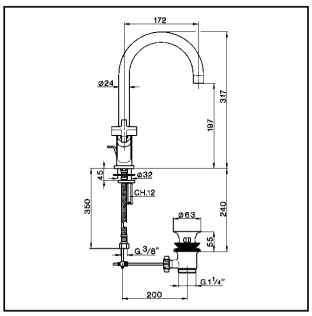

- **Monoforo lavabo**
- ***Single hole basin mixer***
- **Einloch-Waschtischbatterie**
- ***Mélangeur monotrou lavabo***

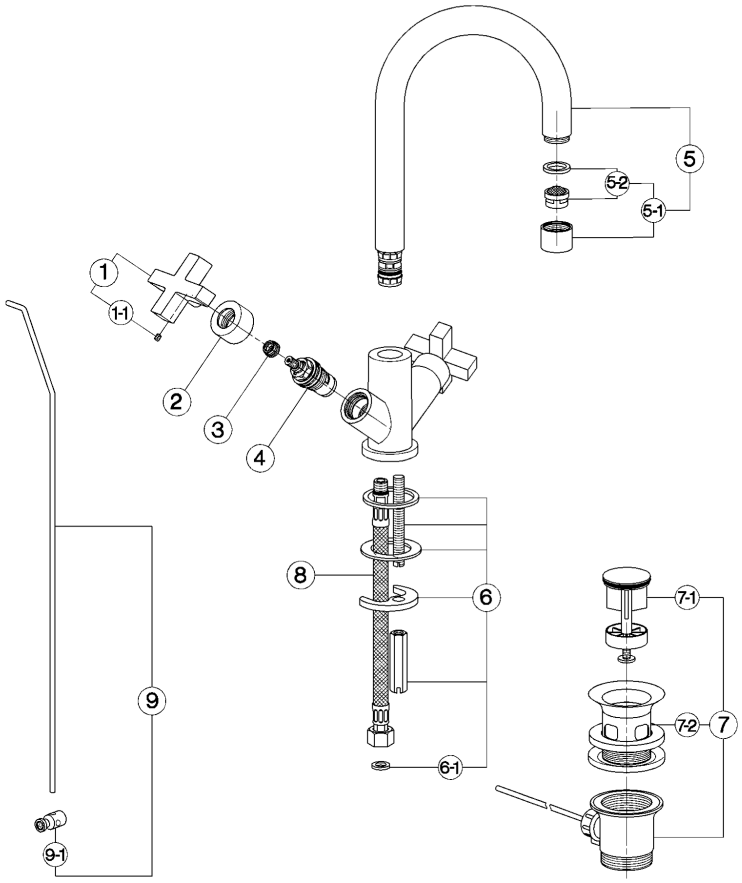

bar	PORTATA BOCCA DI EROGAZIONE * *SPOUT FLOW RATE* DURCHFLUSS WANNENEINLAUF *DÉBIT BEC DÉVERSEUR* l/min.
0.5	6
1	8
2	11.5
3	14
4	16
5	18

* con resistenza silenziosa della classe di portata A (15 l/min. a 3 bar)
with hydraulic resistance of flow rate class A (15 l/min. at 3 bar)
mit geräuscharmen Widerstand der Durchflussklasse A (15 l/min. bei 3 bar)
avec aérateur classe A (15 l/min. à 3 bar)

NR.	DESCRIZIONE *DESCRIPTION* BESCHREIBUNG *DÉSCRIPTION*	N. CODICE *CODE NO.* WERKSNR. *NR. CODE*
1	Maniglia "BA" per monoforo *Handle "BA" for single hole mixer* Griff "BA" f/Einloch-Batterien *Croisillon "BA" pour mélangeur monotrou*	ZZ 93289 0
1-1	Grano punta piana inox M.4x4 *Screw-stainless steel M.4x4* Madenschraube M.4x4 *Vis speciale inox M.4x4*	ZZ 93328 0
2	Cappuccio coprivitone "BA" *Escutcheon "BA"* Abdeckkappe "BA" *Rosace couvre-tête "BA"*	ZZ 93327 0
3	Riduzione brocciata completa *Complete broached reduction piece* Verkuerzung Raeumwerkzeug komplett *Reduction avec brochage complète*	ZZ 93330 0
4	Vitone ceramico 1/2" DX 90° *Ceramic headvalve 1/2" right 90°* Keramikoberteil 1/2" - rechts - 90° *Tête céram. 1/2" droite 90°*	ZZ 92907 0
5	Canna alta Ø24 interasse 172 *Swinging spout 172 Ø24* Auslauf-Rohr-U-172 Ø24 *Bec orientable 172 Ø24*	ZZ 93285 0

NR.	DESCRIZIONE *DESCRIPTION* BESCHREIBUNG *DÉSCRIPTION*	N. CODICE *CODE NO.* WERKSNR. *NR. CODE*
5-1	Aeratore M.22x1 IA Cascade *Mousseur M.22x1 IA Cascade* Perlator M.22x1 IA Cascade *Mousseur M.22x1 IA Cascade*	ZZ 93283 0
5-2	Cartuccia per aeratore M. 22x1 Cascade *Mousseur cartridge M.22x1 Cascade* Kart. f/Perlator M.22x1 Cascade *Cartouche x mousseur M.22x1 Cascade*	ZZ 93339 0
6	Set installazione monocomando monoforo *Installation set single hole* Befestigungsset *Set installation*	ZZ 92899 0
6-1	Guarnizione fibra 3/8" *Gasket rubber 3/8"* Fiberdichtung 3/8" *Joint en fibre 3/8"*	ZZ 92696 0
7	Scarico automatico 1" 1/4 sabbiato *Pop-up waste 1"1/4* Ablaufgarnitur 1" 1/4 *Vidage automat. 1"1/4*	ZZ 92754 0
7-1	Tappo completo scarico automatico 1" 1/4 *Plug for pop-up waste 1" 1/4* Stopfen f/Ablaufg. kpl 1" 1/4 *Bonde - vidage 1"1/4*	ZZ 92925 0

NR.	DESCRIZIONE *DESCRIPTION* BESCHREIBUNG *DÉSCRIPTION*	N. CODICE *CODE NO.* WERKSNR. *NR. CODE*
7-2	Piletta per scarico automatico 1" 1/4 *Waste for bath drain 1" 1/4* Ablauf f/Ablaufgarnitur 1" 1/4 *Crépine pour vidage 1" 1/4*	ZZ 92924 0
8	Flessibile M.11x1 3/8"F L.365 *Flex M.11x1 3/8" L.365* Anschlussschlauch M.11x1 3/8" L.365 *Flex M.11x1 3/8" L.365*	ZZ 92842 0
9	Astina scarico completa Ø4 *Rod Ø4* Zugstange Ø4 *Tige Ø4*	ZZ 93340 0
9-1	Morsetto astina scarico automatico *Connection for pop-up rod* Gelenkstueck f/Zugstange *Jonction x tige vidage*	ZZ 93343 0

BA.11

© 2021 Cisal. Via Pietro Durio 160 - 28010 - Alzo (NO) - Italia
Mail: cisal@cisal.it, Telefono: (+39) 0322 918111, P.Iva IT02422810032.