Cisal
TEL. (+39) 0322 918111
MAIL. cisal@cisal.it

Sifone Lavabo 1"1/4 XION_ZA004130

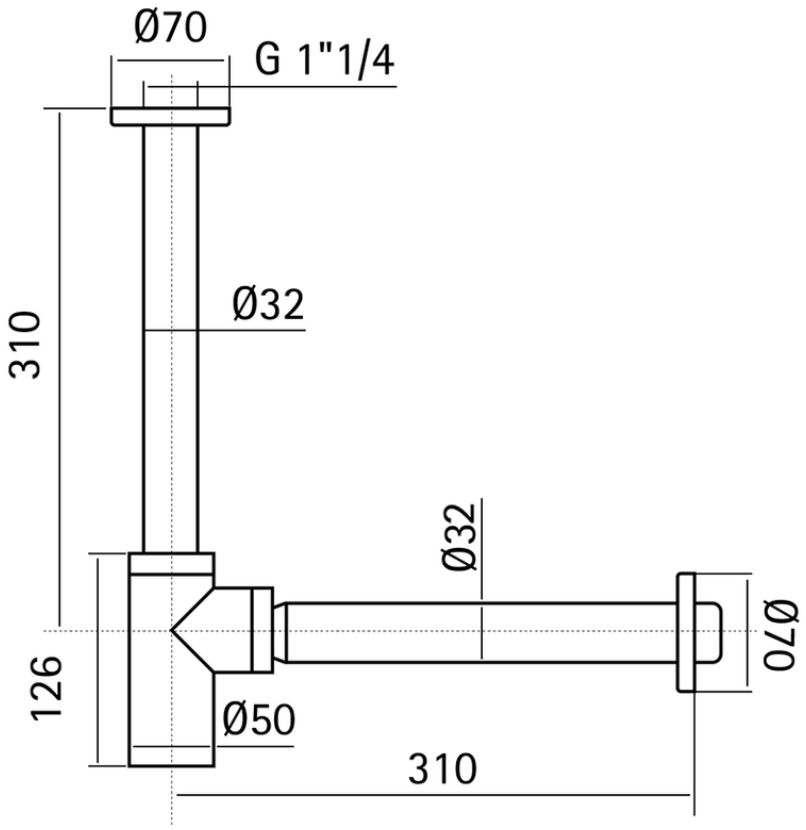

ZA004130

https://www.cisal.it/sifone-lavabo-11-4-xion-za004130

2026-03-11

© 2021 Cisal. Via Pietro Durio 160 - 28010 - Alzo (NO) - Italia
Mail: cisal@cisal.it, Telefono: (+39) 0322 918111, P.Iva IT02422810032.