Miscelatore monocomando lavello a parete ARCANA ROYAL_AY000400

cisal

AY 00040

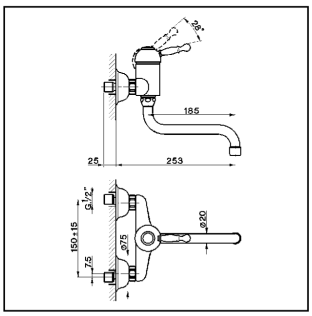

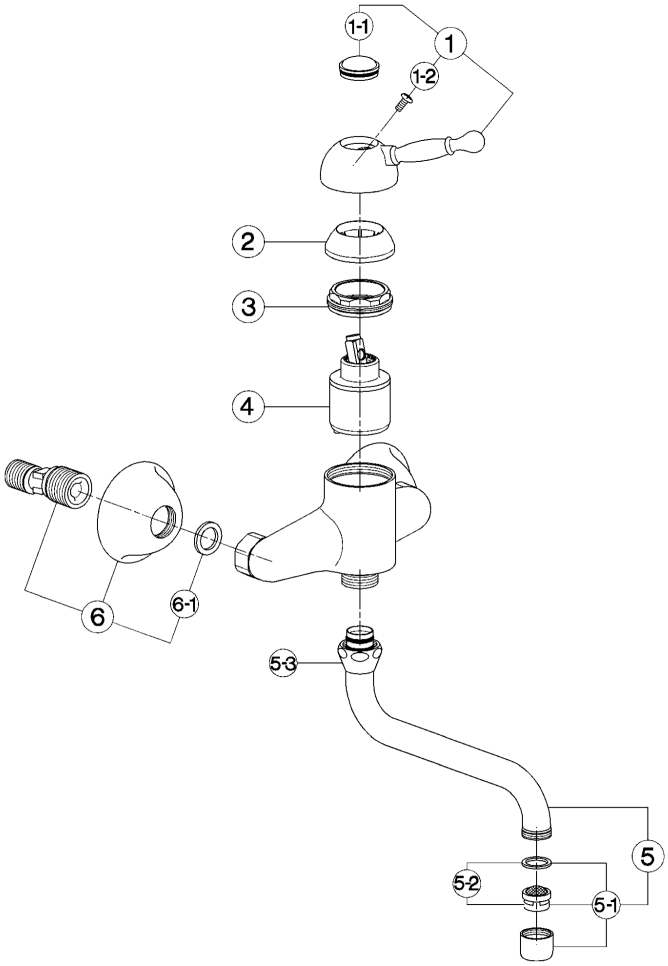

- **Monocomando lavello**
- ***Single lever sink mixer***
- **Einhand-Spültischbatterie**
- ***Mitigeur évier mural***

bar	PORTATA BOCCA DI EROGAZIONE * *SPOUT FLOW RATE* DURCHFLUSS WANNENEINLAUF *DÉBIT BEC DÉVERSEUR* l/min.
0.5	6
1	8
2	11.5
3	14
4	16
5	17.5

* con resistenza silenziosa della classe di portata A (15 l/min. a 3 bar)
with hydraulic resistance of flow rate class A (15 l/min. at 3 bar)
mit geräuscharmen Widerstand der Durchflussklasse A (15 l/min. bei 3 bar)
avec aérateur classe A (15 l/min. à 3 bar)

NR.	DESCRIZIONE *DESCRIPTION* BESCHREIBUNG *DÉSCRIPTION*	N. CODICE *CODE NO.* WERKSNR. *NR. CODE*
1	Leva monocomando "AY" *Lever "AY"* Hebel "AY" *Levier "AY"*	ZZ 90370 0
1-1	Placchetta per leva "AY" *Cap for lever "AY"* Abdeckkappe f/Hebel "AY" *Plaquette levier "AY"*	ZZ 93048 0
1-2	Vite M.4,5x15 tb. tc. *Screw M.4,5x15* Schraube M.4,5x15 *Vis M.4,5x15*	ZZ 92641 0
2	Copricartuccia senza ideogrammi *Escutcheon cartridge without ideogram* Abdeckkappe ohne Ideogramm *Couvre-cartouche sans ideogramme*	ZZ 92718 0
3	Calotta bloccaggio cartuccia piccola *Nut for mixing valve-small* Mutter f/Kartusche *Ecrou pour cartouche*	ZZ 92603 0
4	Cartuccia monocomando piccola *Mixing valve - small size* Kartusche *Cartouche mitigeurs*	ZZ 92909 0

NR.	DESCRIZIONE *DESCRIPTION* BESCHREIBUNG *DÉSCRIPTION*	N. CODICE *CODE NO.* WERKSNR. *NR. CODE*
5	Canna a S Ø20 interasse 185 *Swinging spout 185 Ø20* Auslauf-Rohr-S-185 Ø20 *Bec orientable 185 Ø20*	ZZ 93397 0
5-1	Aeratore M.22x1 IA Cascade *Mousseur M.22x1 IA Cascade* Perlator M.22x1 IA Cascade *Mousseur M.22x1 IA Cascade*	ZZ 93345 0
5-2	Cartuccia per aeratore M. 22x1 Cascade *Mousseur cartridge M.22x1 Cascade* Kart. f/Perlator M.22x1 Cascade *Cartouche x mousseur M.22x1 Cascade*	ZZ 93339 0
5-3	Calotta 3/4" es.29 Ø19,5 *Nut 3/4" Ø19,5* Mutter 3/4" Ø19,5 *Ecrou 3/4" Ø19,5*	ZZ 92615 0
6	Eccentrico con rosone "AC" *Excentric connection with escutcheon "AC"* S - Anschluss m.Rosette "AC" *Excentrique + rosace "AC"*	ZZ 92826 0
6-1	Guarnizione NBR 90 SH. 24x16x2,7 *Gasket NBR 90 SH. 24x16x2,7* Dichtung NBR 90 SH. 24x16x2,7 *Joint NBR 90 SH. 24x16x2,7*	ZZ 92689 0

NR.	DESCRIZIONE *DESCRIPTION* BESCHREIBUNG *DÉSCRIPTION*	N. CODICE *CODE NO.* WERKSNR. *NR. CODE*

AY.3

AY000400 https://www.cisal.it/miscelatore-monocomando-lavello-a-parete-arcana-royal-ay000400

2026-06-21