Cisal
TEL. (+39) 0322 918111
MAIL. cisal@cisal.it

Miscelatore lavello KITCHEN_RE000530



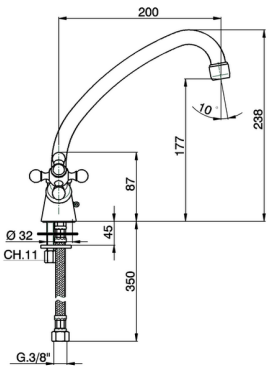

MODELLO **RE000530**

Miscelatore lavello,bocca girevole,flex inox G.3/8"

FINITURE DISPONIBILI

21 21 Cromo

26 26 Vecchio Rame

27 27 Vecchio Bronzo

49 49 Terra di Francia

CARATTERISTICHE

© 2021 Cisal. Via Pietro Durio 160 - 28010 - Alzo (NO) - Italia
Mail: cisal@cisal.it, Telefono: (+39) 0322 918111, P.Iva IT02422810032.

Miscelatore lavello KITCHEN_RE000530

cisal

RE 00052 (RE 00053)

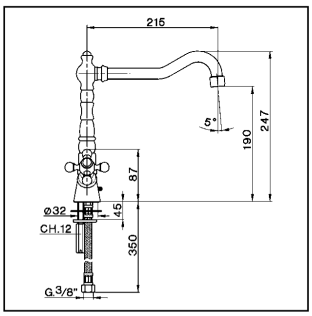

- **Monoforo lavello**
- ***Single hole sink mixer***
- **Einloch-Spültischbatterie**
- ***Mélangeur monotrou évier***

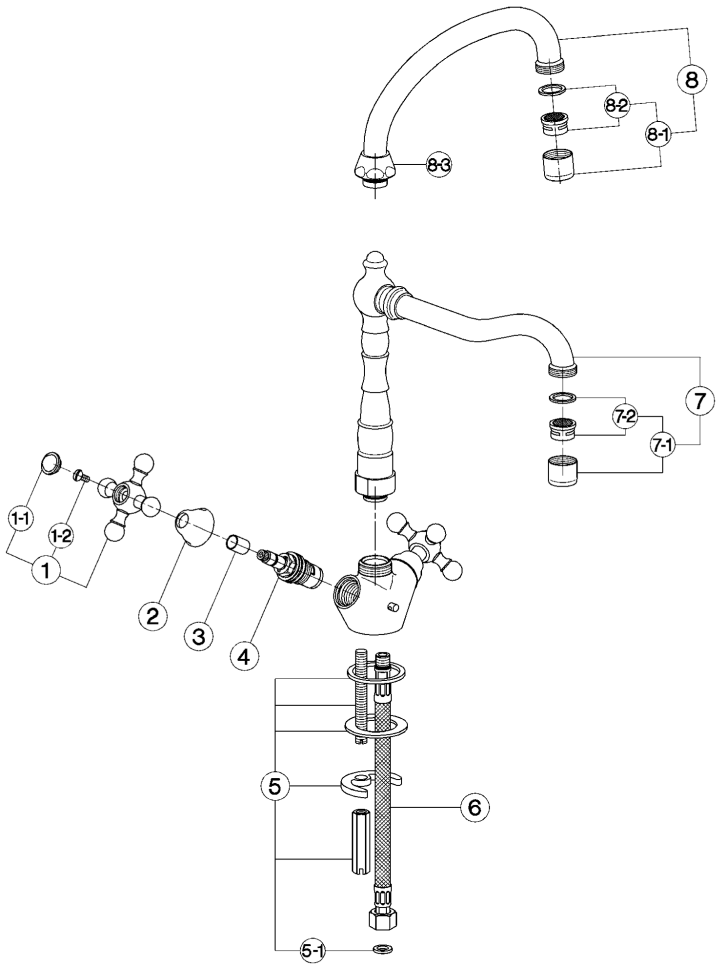

bar	PORTATA BOCCA DI EROGAZIONE * *SPOUT FLOW RATE* DURCHFLUSS WANNENEINLAUF *DÉBIT BEC DÉVERSEUR* l/min.
0.5	5.5
1	8
2	11
3	13.5
4	15.5
5	17.5

* con resistenza silenziosa della classe di portata A (15 l/min. a 3 bar)
with hydraulic resistance of flow rate class A (15 l/min. at 3 bar)
mit geräuscharmen Widerstand der Durchflussklasse A (15 l/min. bei 3 bar)
avec aérateur classe A (15 l/min. à 3 bar)

NR.	DESCRIZIONE *DESCRIPTION* BESCHREIBUNG *DÉSCRIPTION*	N. CODICE *CODE NO.* WERKSNR. *NR. CODE*
1	Maniglia "AR" con vite e placchetta *Handle with screw and plate "AR"* Griff "AR" mit Schraube und Abdeckkappe *Croisillon avec vis et plaquette "AR"*	ZZ 90307 0
1-1	Placchetta a vite maniglia "AR" *Cap for handle "AR"* Abdeckkappe "AR" Griff *Plaquette cache - vis crois. "AR"*	ZZ 92617 0
1-2	Vite M.4,5x10 tb. tc. zigrinata *Screw M.4,5x10* Schraube M.4,5x10 *Vis M.4,5x10*	ZZ 92609 0
2	Cappuccio coprivitone Ø32 H.21 "AC" *Escutcheon Ø32 H.21 "AC" headvalve* Abdeckkappe Ø32 H.21 "AC" *Rosace couvre-tête Ø32 H.21 "AC"*	ZZ 92652 0
3	Tubetto copriasta "AR" H.15,5 *Sliding cover tube "AR" H.15,5* Abdeckkappe Oberteil "AR" H.15,5 *Tube couvre-tête "AR" H.15,5*	ZZ 92619 0
4	Vitone ceramico DX per monofori e gruppi "AC" *Ceramic headvalve 1/2" right "AC"-short* Keramikoberteil 1/2"-rechts-"AC"-kurz *Tête céramique 1/2" droite "AC" - courte*	ZZ 92858 0
5	Set installazione monoforo *Installation set single hole* Befestigungsset *Set installation*	ZZ 92828 0
5-1	Guarnizione fibra 3/8" *Gasket rubber 3/8"* Fiberdichtung 3/8" *Joint en fibre 3/8"*	ZZ 92696 0
6	Flessibile M.11x1 3/8"F L.365 *Flex M.11x1 3/8" L.365* Anschlussschlauch M.11x1 3/8" L.365 *Flex M.11x1 3/8" L.365*	ZZ 92842 0
7	Canna alta "RE" *Spout "RE"* Auslauf-Rohr-U-"RE" *Bec "RE"*	ZZ 90819 0
7-1	Aeratore M.22x1 IB *Mousseur M.22x1 IB* Perlator M.22x1 IB *Mousseur M.22x1 IB*	ZZ 92841 0
7-2	Cartuccia per aeratore M. 22x1 *Mousseur cartridge M.22x1* Kart. f/Perlator M.22x1 *Cartouche x mousseur M.22x1*	ZZ 92703 0
8	Canna alta Ø18 interasse 200 con aeratore *Swinging spout 200 Ø18 with mousseur* Auslauf-Rohr-U-200 Ø18 mit Perlator *Bec orientable 200 Ø18 avec mousseur*	ZZ 92801 0
8-1	Aeratore M.22x1 IB *Mousseur M.22x1 IB* Perlator M.22x1 IB *Mousseur M.22x1 IB*	ZZ 92841 0
8-2	Cartuccia per aeratore M. 22x1 *Mousseur cartridge M.22x1* Kart. f/Perlator M.22x1 *Cartouche x mousseur M.22x1*	ZZ 92703 0
8-3	Calotta 3/4" es.29 Ø19,5 *Nut 3/4" Ø19,5* Mutter 3/4" Ø19,5 *Ecrou 3/4" Ø19,5*	ZZ 92615 0

AC.17

© 2021 Cisal. Via Pietro Durio 160 - 28010 - Alzo (NO) - Italia
Mail: cisal@cisal.it, Telefono: (+39) 0322 918111, P.Iva IT02422810032.