Cisal
TEL. (+39) 0322 918111
MAIL. cisal@cisal.it

Piletta click-clack 1"1/4 per lavabo COMPLEMENTI_ZA001620

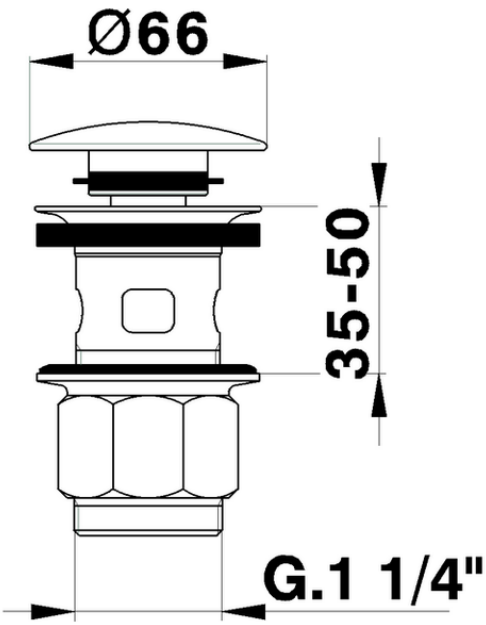

ZA001620

https://www.cisal.it/piletta-click-clack-11-4-per-lavabo-complementi-za001620

2026-09-15

© 2021 Cisal. Via Pietro Durio 160 - 28010 - Alzo (NO) - Italia
Mail: cisal@cisal.it, Telefono: (+39) 0322 918111, P.Iva IT02422810032.