Cisal
TEL. (+39) 0322 918111
MAIL. cisal@cisal.it

# Parte esterna monocomando lavabo a parete ROADSTER ACCENT_RA005513

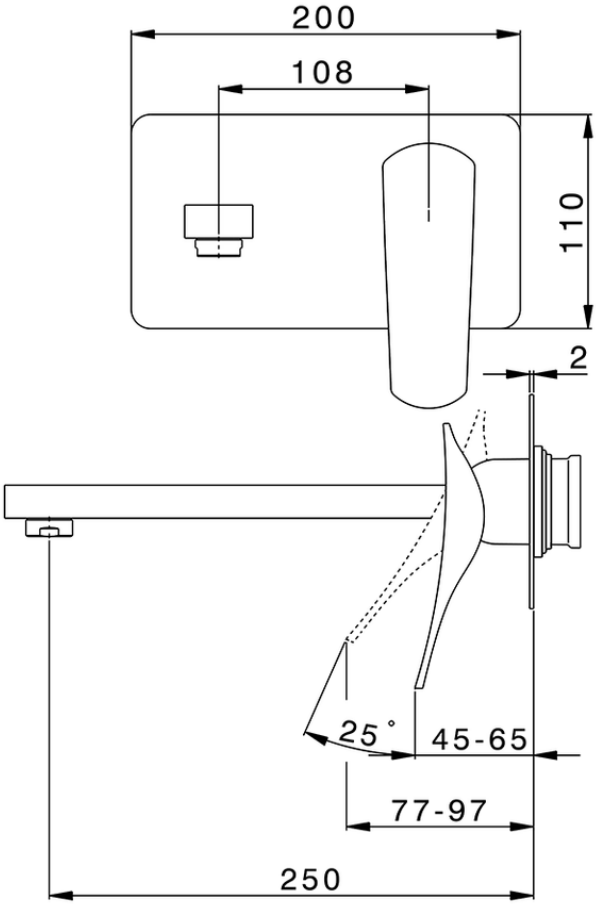


RA005513 https://www.cisal.it/parte-esterna-monocomando-lavabo-a-parete-roadster-accent-ra005513

2026-03-22

© 2021 Cisal. Via Pietro Durio 160 - 28010 - Alzo (NO) - Italia
Mail: cisal@cisal.it, Telefono: (+39) 0322 918111, P.Iva IT02422810032.