# Deviatore incasso 2 uscite TR_TR000200

cisal

## TR 00021 (TR 00020 - TR 00030)

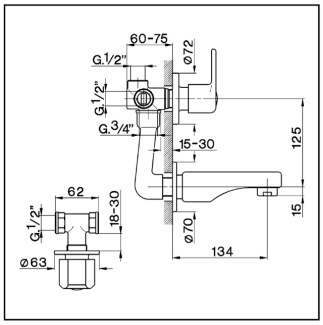


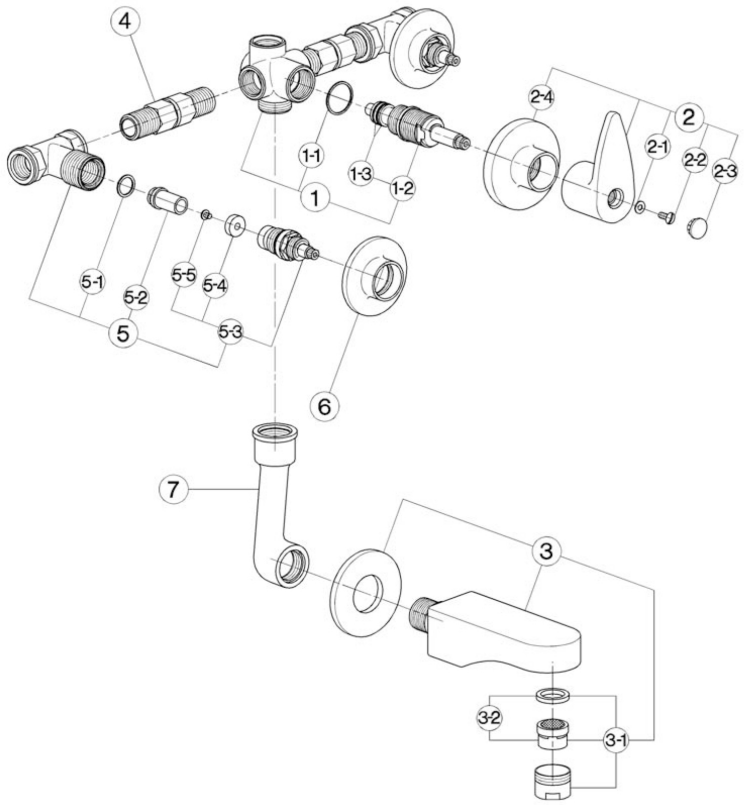


- **Gruppo vasca - doccia incasso**
- ***Concealed bath-shower mixer***
- **UP-Badebatterie**
- ***Mélangeur bain/douche à encastrer***

| bar | PORTATA BOCCA DI EROGAZIONE * *SPOUT FLOW RATE* DURCHFLUSS WANNENEINLAUF *DÉBIT BEC DÉVERSEUR* l/min. |
|---|---|
| 0.5 | 10 |
| 1 | 14 |
| 2 | 20 |
| 3 | 24.5 |
| 4 | 28 |
| 5 | 31.5 |

* con resistenza silenziosa della classe di portata C (30 l/min. a 3 bar)
*with hydraulic resistance of flow rate class C (30 l/min. at 3 bar)*
mit geräuscharmen Widerstand der Durchflussklasse C (30 l/min. bei 3 bar)
*avec aérateur classe C (30 l/min. à 3 bar)*

| NR. | DESCRIZIONE *DESCRIPTION* BESCHREIBUNG *DÉSCRIPTION* | N. CODICE *CODE NO.* WERKSNR. *NR. CODE* |
|---|---|---|
| 1 | Gruppo deviazione incasso "TR"<br>*Diverter concealed "TR"*<br>Umstelloberteil "TR"<br>*Inverseur B/D "TR"* | ZZ 92733 0 |
| 1-1 | Guarnizione fibra 27x24x1<br>*Gasket rubber 27x24x1*<br>Fiberdichtung 27x24x1<br>*Joint en fibre rouge 27x24x1* | ZZ 92687 0 |
| 1-2 | Vitone per deviazione incasso<br>*Diverting valve for concealed mixer*<br>Umstelloberteil<br>*Tête pour inverseur* | ZZ 92769 0 |
| 1-3 | O.R. 11 NBR 75 SH.<br>*O.R. 11 NBR 75 SH.*<br>O.R. 11 NBR 75 SH.<br>*O.R. 11 NBR 75 SH.* | ZZ 92690 0 |
| 2 | Maniglia e cappuccio deviazione incasso "TR"<br>*Handle with escutcheon for diverter "TR"*<br>Griff + Kappe UP - Umst."TR"<br>*Croisillon + rosace "TR"* | ZZ 90012 0 |
| 2-1 | Rondella ottone 10x4,5x0,8<br>*Ring in brass 10x4,5x0,8*<br>Unterlegscheibe 10x4,5x0,8<br>*Joint laiton 10x4,5x0,8* | ZZ 92663 0 |
| 2-2 | Vite M.4,5x10 tb. tc. zigrinata<br>*Screw M.4,5x10*<br>Schraube M.4,5x10<br>*Vis M.4,5x10* | ZZ 92609 0 |
| 2-3 | Placchetta a scatto deviatore vasca "TR"<br>*Cap for diverter "TR"*<br>Abdeckkappe "TR"<br>*Plaquette cache - vis inverseur "TR"* | ZZ 92610 0 |
| 2-4 | Cappuccio centrale per dev. gruppo incasso<br>*Escutcheon for concealed diverter*<br>Abdeckkappe<br>*Rosace - inverseur à encastrer* | ZZ 92594 0 |

| NR. | DESCRIZIONE *DESCRIPTION* BESCHREIBUNG *DÉSCRIPTION* | N. CODICE *CODE NO.* WERKSNR. *NR. CODE* |
|---|---|---|
| 3 | Bocca per incasso<br>*Spout concealed*<br>Auslauf-UP<br>*Bec à encastrer* | ZA 00024 0 |
| 3-1 | Aeratore M.28x1 IC<br>*Mousseur M.28x1 IC*<br>Perlator M.28x1 IC<br>*Mousseur M.28x1 IC* | ZZ 92837 0 |
| 3-2 | Cartuccia per aeratore M. 28x1<br>*Mousseur cartridge M.28x1*<br>Kart. f/Perlator M.28x1<br>*Cartouche x mousseur M.28x1* | ZZ 92694 0 |
| 4 | Raccordo universale per gruppo incasso<br>*Connection for concealed mixer*<br>Stand-Anschluss<br>*Raccord universel* | ZZ 92600 0 |
| 5 | Rubinetto incasso 1/2"<br>*Concealed stop cock 1/2"*<br>Unterputventil 1/2"<br>*Robinet à encastrer 1/2"* | ZZ 92732 0 |
| 5-1 | Guarnizione alluminio cotto 18x14,2x1<br>*Gasket aluminium 18x14,2x1*<br>Dichtung 18x14,2x1<br>*Joint alluminium 18x14,2x1* | ZZ 92667 0 |
| 5-2 | Sede per rubinetto incasso<br>*Seat for concealed stop cock*<br>Sitz f/UP - Ventil<br>*Siège robinet encastrer* | ZZ 92611 0 |
| 5-3 | Vitone 1/2" "TR"<br>*Headvalve 1/2" "TR"*<br>Oberteil 1/2" "TR"<br>*Tête 1/2" "TR"* | ZZ 92869 0 |
| 5-4 | Guarnizione NBR 90 SH. 16,9x5,5x5<br>*Gasket NBR 90 SH. 16,9x5,5x5*<br>Dichtung NBR 90 SH. 16,9x5,5x5<br>*Joint NBR 90 SH. 16,9x5,5x5* | ZZ 92699 0 |

| NR. | DESCRIZIONE *DESCRIPTION* BESCHREIBUNG *DÉSCRIPTION* | N. CODICE *CODE NO.* WERKSNR. *NR. CODE* |
|---|---|---|
| 5-5 | Vite M.4x4,5 tb. Ø8 t.cr.<br>*Screw M.4x4,5*<br>Schraube M.4x4,5<br>*Vis M.4x4,5* | ZZ 92625 0 |
| 6 | Cappuccio per rubinetto incasso "TR"<br>*Escutcheon for concealed stop cock "TR"*<br>Abdeckkappe "TR"<br>*Rosace - robinet "TR"* | ZZ 92593 0 |
| 7 | Raccordo collegamento a pipa per incasso<br>*Connection for concealed mixer*<br>UP - Verbindungsset<br>*Raccord x mél. B/D à encastrer* | ZZ 92592 0 |



© 2021 Cisal. Via Pietro Durio 160 - 28010 - Alzo (NO) - Italia
Mail: cisal@cisal.it, Telefono: (+39) 0322 918111, P.Iva IT02422810032.